REV	EC No.	DESCRIPTION	Symbol	DATE
A	/	new release	/	Nov. 12, 2021

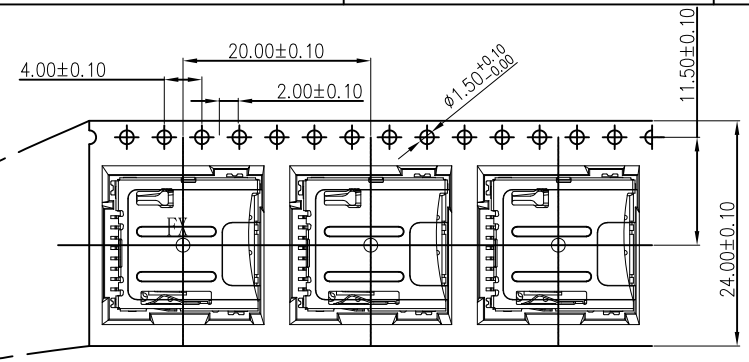

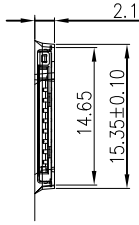

RoHS Compliant Pb

NOTES

1. QUANTITY: 1200PCS/reel
2. package:

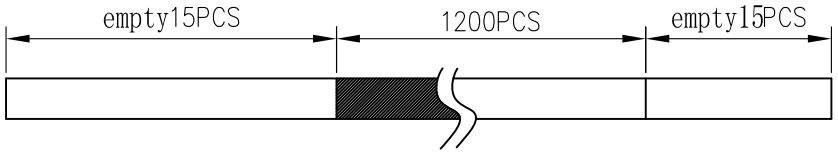

3.total 12000PCS/carton

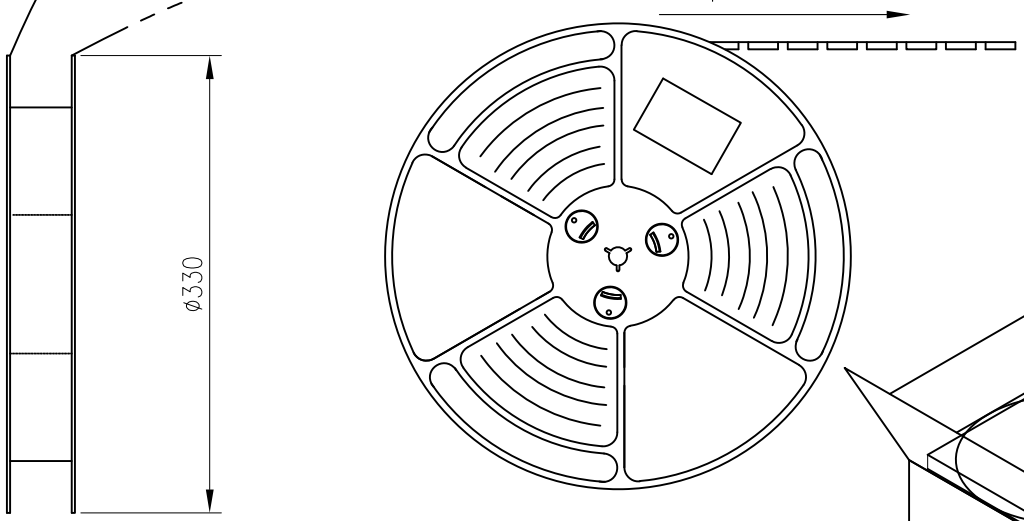

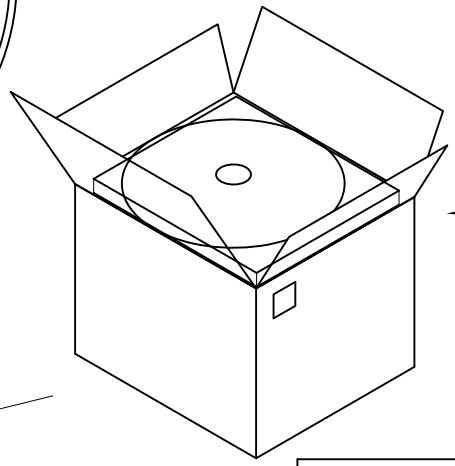

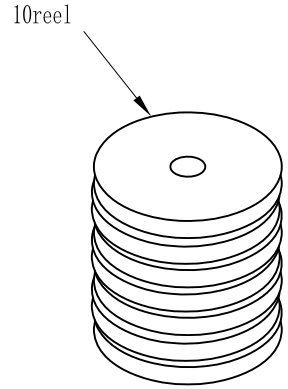

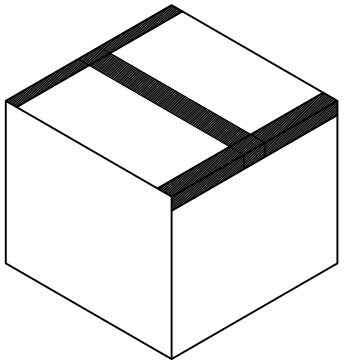

DIMENSION UNITS: MM	TOLERANCE: X±0.50 .XX±0.25 .X±0.35 .XXX±0.15	ConnMold	
DRWN: Robert	Nov. 12, 2021	PART NAME: MICRO SD PUSH PUSH TYPE 1.50MM HEIGHT	
CHK'D: Yuri	Nov. 12, 2021	PART NUMBER: CMMSD661006	REVISION: A
APPR: Linda	Nov. 12, 2021		
THIRD ANGLE PROJECTION	CUSTOMER P/N: /	CUSTOMER: GENERAL MARKET	SHEET NUMBER: 3 OF 3