REV	EC No.	DESCRIPTION	Symbol	DATE
A	/	new release	/	Dec. 12, 2020

RoHS Compliant Pb

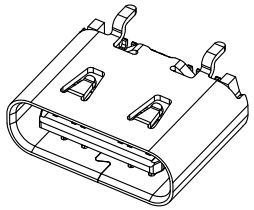

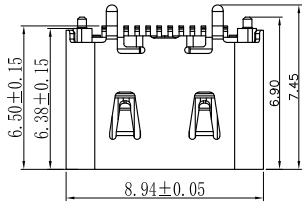

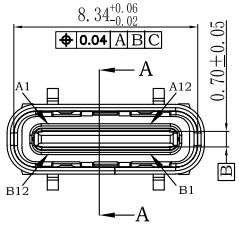

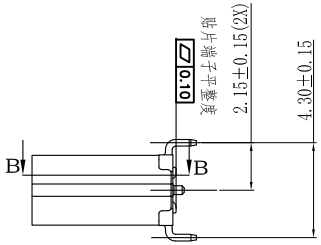

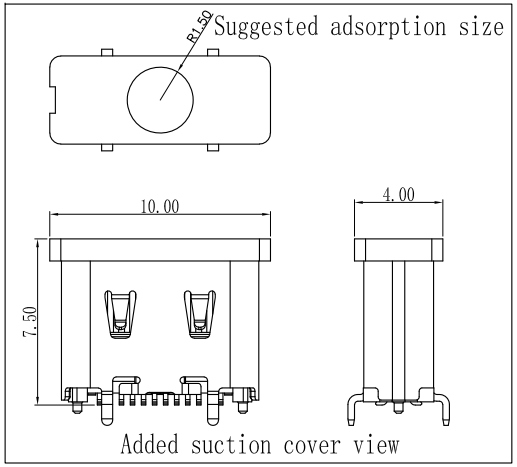

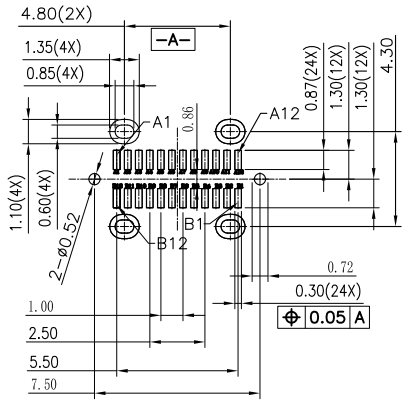

RECOMMEDNDED PCB LAYOUT

TOL.: ±0.05

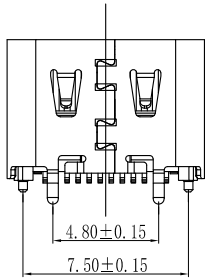

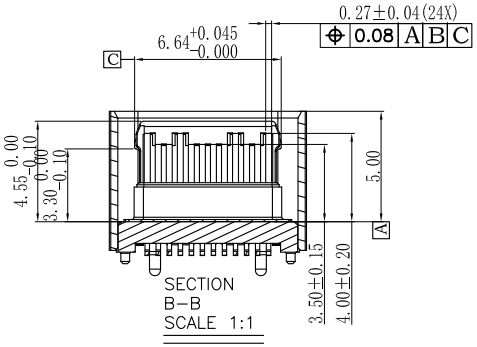

Note:
1.Material:
1.1 Housing: LCP
1.2 Contact:C7025,T=0.15mm
1.3 Shell: SUS304 T=0.3mm
2.ELECTRICAL:
2-1:CURUENT RATAING:
VBUS AND GND CONTACTS RATED AT 1.25A
PARALLELED FOR A TOTAL OF 5A;
2-2:INITIAL CONTACT RESISTANCE :40mΩ max
2-3:DIEELECTRIC WITHSTANDING VOLTAGE:
100V AC MIN;
3:MECHANICAL CHARACTERISTICS:
3-1:MATING FORCE:5~20N
3-2:UNMATING FORCE:8~20N(INITIAL),
6~20N(AFTER 10000 CYCLES)
3-3:FREQUENCE: 200±50 CYCLES /HOUR,
10000 CYCLES
3-4:OPERATING TEMPERATURE ;-40°~85°.

For more information, please help to contact: connmold@foxmail.com Tel.:18922965797

WWW.connmold.COM

ConnMold

DIMENSION UNITS: MM	TOLERANCE: X±0.50 .XX±0.25 .X±0.35 .XXX±0.15	PART NAME: USB TYPE C RECEPTACLES 24 PIN VERTICAL 6.50MM	
DRWN:Robert	Dec.12,2020		
CHK'D:Yuri	Dec.12,2020	PART NUMBER: CMUCF661016B	REVISION: A
APPR:Linda	Dec.12,2020		
THIRD ANGLE PROJECTION	CUSTOMER P/N: /	CUSTOMER: GENERAL MARKET	SHEET NUMBER: 1 OF 2